This document is the property of BSPTCL and must not be passed on to any third person or firm not authorised by BSPTCL, nor be copied/made use of in full or part by such person or firm without our prior permission in writing

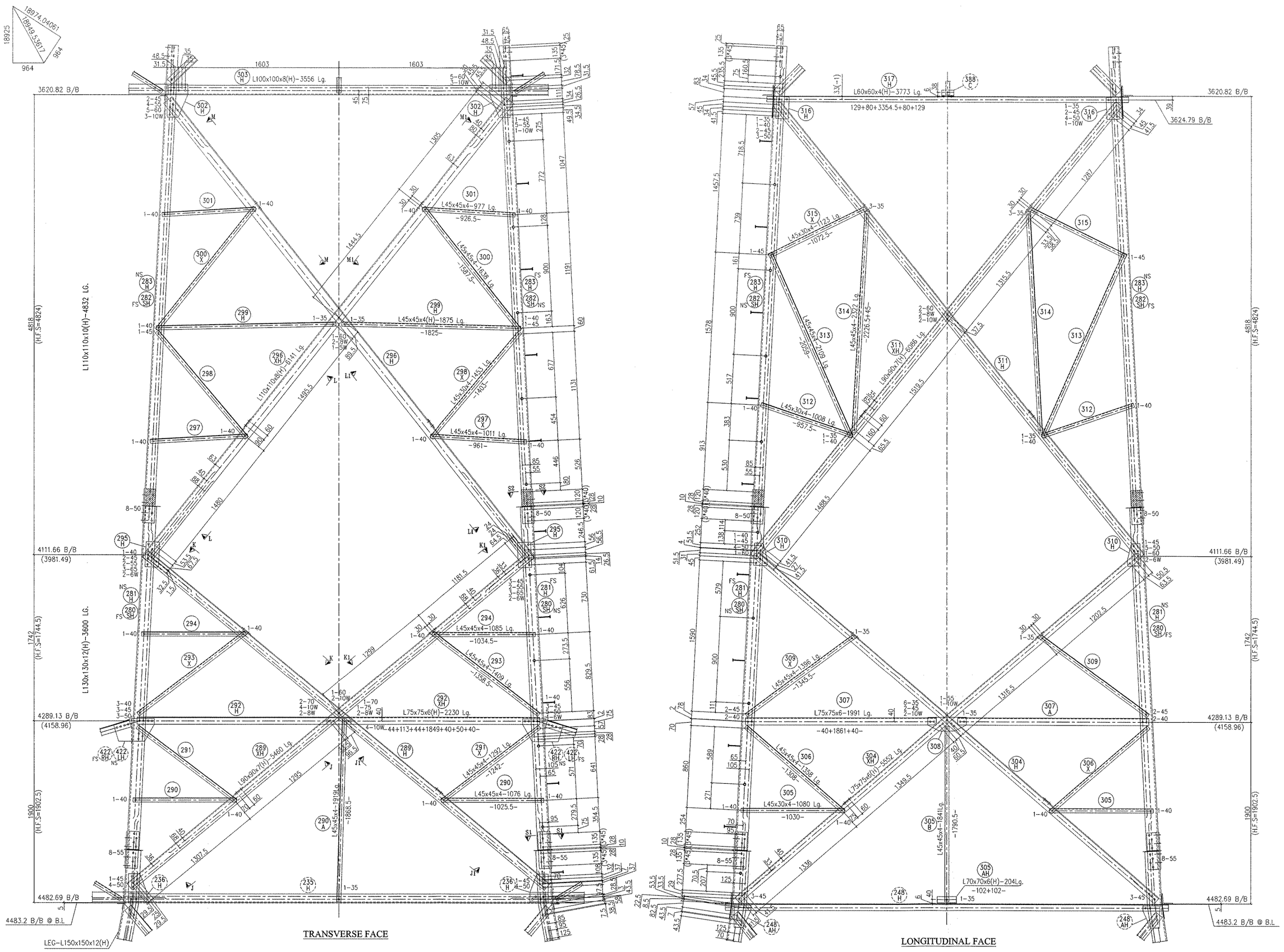

TRANSVERSE FACE

LONGITUDINAL FACE

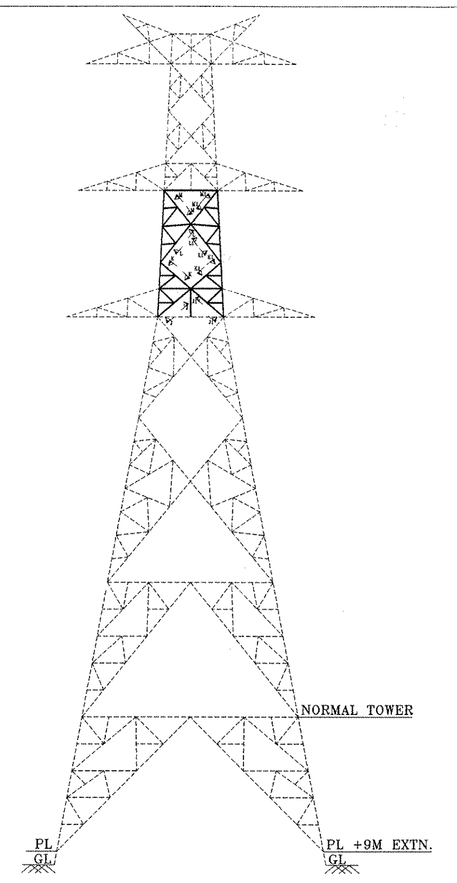

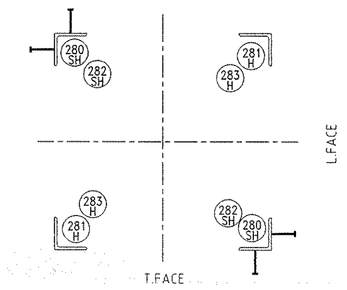

PLAN OF LEGS POSITION

REQUIREMENT OF BOLTS, NUTS & WASHERS			
SIZE	QTY.	GRADE	REMARKS
16ø x 35mm Lg.	126	5.6	BOLTS & NUTS
16ø x 40mm Lg.	90	5.6	BOLTS & NUTS
16ø x 45mm Lg.	76	5.6	BOLTS & NUTS
16ø x 50mm Lg.	128	5.6	BOLTS & NUTS
16ø x 55mm Lg.	92	5.6	BOLTS & NUTS
16ø x 60mm Lg.	32	5.6	BOLTS & NUTS
16ø x 65mm Lg.	12	5.6	BOLTS & NUTS
16ø x 70mm Lg.	6	5.6	BOLTS & NUTS
16ø x 75mm Lg.	2	5.6	BOLTS & NUTS
16ø x 3.5 THK	564	–	SPRING WASHERS
16ø x 175mm Lg.	36	–	STEP BOLTS
16ø x 5 THK	2	–	PACK WASHERS
16ø x 6 THK	20	–	PACK WASHERS
16ø x 8 THK	16	–	PACK WASHERS
16ø x 10 THK	46	–	PACK WASHERS

NOTES:

1. ALL DIMENSIONS ARE IN mm UNLESS OTHERWISE SPECIFIED.
2. BOLT SYMBOLS 16ø ⊕ = 17.5ø HOLES
   16ø ⊕ = 17.5ø HOLES FOR STEP BOLTS
3. ALL ERECTION MARKS ARE TO BE PREFIXED WITH "77B4DA"
4. STRUCTURAL STEEL SHALL BE AS PER IS 2062-2011
   (i) MILD STEEL – GRADE E250 QUALITY A – UNLESS OTHERWISE SPECIFIED.
   (ii) "H" STANDS FOR HIGH TENSILE STEEL – GRADE E350 QUALITY A
5. BOLTS & NUTS SHALL CONFORM TO IS : 12427-2001 (R-2007) FOR DIMENSIONS AND IS : 1367 (PART 3)-2002 FOR MECHANICAL PROPERTIES
6. GALVANISING SHALL CONFORM TO IS:2629-1985 (R-2006) & IS:4759-1996 (R-2006)
7. SPRING WASHER SHALL BE CONFORM TO IS 3063-1994 (R-2004)
8. STEP BOLTS SHALL BE PROVIDED ON THE DIAGONALLY OPPOSITE LEGS.
9. ALL PARTS/ MEMBERS OF TESTED TOWER SHOULD BE PUNCHED WITH PART NUMBER PREFIXED WITH 'T' IN ADDITION TO THE STANDARD MARK NUMBERS

SUCCESSFULLY TESTED AT L&T-TLTRS-KANCHIPURAM ON 30th OF JULY 2019

PART NO. 280 TO 341

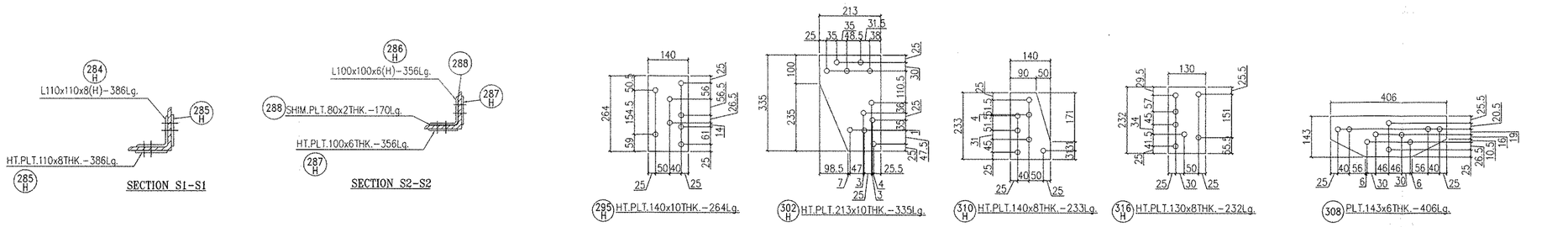

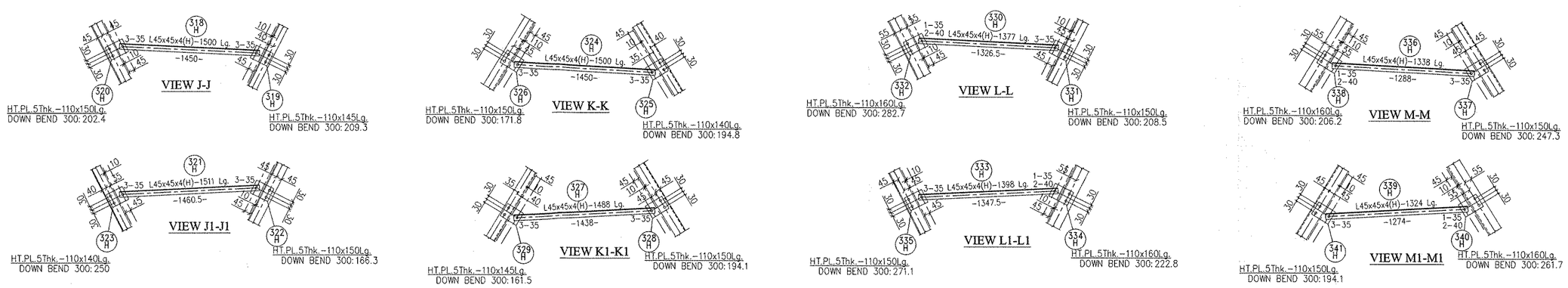

DATE	REV.NO.	DESCRIPTION	DESIGNED (STRUCTURAL)	CHECKED (STRUCTURAL)	DRAWN (DETAILING)	CHECKED (DETAILING)	APPROVED
31.07.19	1	SUBMISSION AFTER SUCCESSFUL TESTING	PB	RJR	MBR	PU/BSR	CSR
05.04.19	0	FIRST SUBMISSION FOR APPROVAL BEFORE PROTO	PB	RJR	MR	SVR/BSR	CSR

REVISIONS

CLIENT : **BIHAR STATE POWER TRANSMISSION CO.LTD., PATNA**

SUPPLIER / CONTRACTOR : **L&T Construction** *Power Transmission & Distribution*

PROJECT : **PACKAGE - NIT 77 UNDER STATE PLAN [80:20], CONSTRUCTION OF :**
(I) LILO OF BARH-PATNA 400 KV D/C (QUAD) TL AT BAKHTIYARPUR (LINE LENGTH 10RKM),
(II) 220 KV D/C BAKHTIYARPUR - SHEIKHPURA TL (ACSR ZEBRA) (LINE LENGTH - 51 RKM)
(III) 220 KV D/C BAKHTIYARPUR -HATHIDAH TL (ACSR ZEBRA) (LINE LENGTH -52 RKM) AND
(IV) 220 KV D/C BAKHTIYARPUR – FATHUA TL (ACSR ZEBRA) (LINE LENGTH - 28 RKM)

JOB No. : O18089-T-TL	NAME	DATE
DSGN	PB	10.03.19
DRWN	MR	20.03.19
CHKD	SVR/BSR	20.03.19
APPD	CSR	20.03.19

TITLE :
G.A OF CAGE PART-1
FOR TOWER TYPE -"4DA" (0°-2°DEV)
400KV D/C QUAD ACSR MOOSE (WZ-4)

SCALE 1 :25

SHEET NO. 3 OF 7

DRG. No. 0 1 8 0 8 9 - T - T L - 8 D - G A - 0 1 0 4

SIZE A1 REV. 1

RELEASED FOR ☐ PRELIMINARY ☐ TENDER ☐ INFORMATION ☑ APPROVAL ☐ CONSTRUCTION

APPROVED
Signed in the capacity defined in the Bihar State Electricity Reforms (Transfer Scheme) Rules, 2008 for and on behalf of the Bihar State Power (Holding) Company Ltd.
Executive Engineer
Electrical Superintending Engineer
(Planning and Engineering)